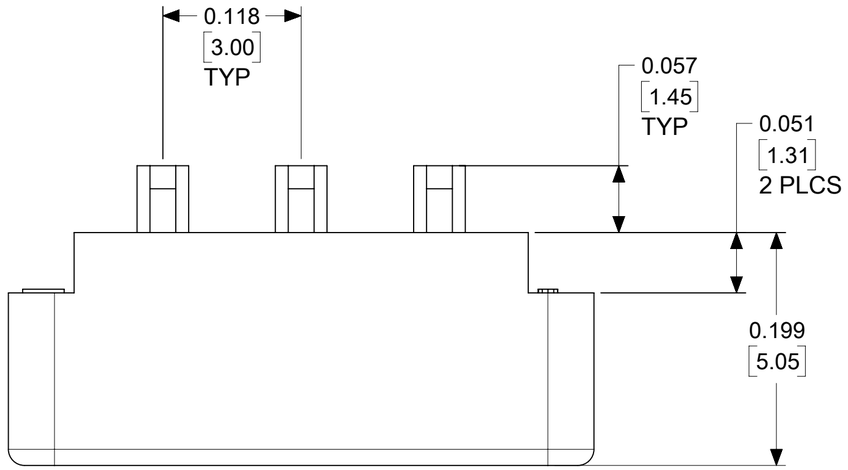

NOTES:
1) MATERIAL:
UNFILLED NYLON, RATED UL94V-0 LOW HALOGEN, COLOR: NATURAL
2) FINISH: NONE
3) PRODUCT SPECIFICATION: PS-43045
4) PACKAGING SPECIFICATION: BULK PER 1729530001-PK
5) FOR USE WITH: 172952-XX01 RECEPTACLE HOUSINGS. NEVER USE WITHOUT TPA.
6) THIS PART CONFORMS TO CLASS B REQUIREMENTS OF COSMETIC SPEC PS-45499-002
7) TEXT ON PART IS FOR REFERENCE ONLY. TEXT AND TEXT LOCATION MAY VARY DEPENDING ON PART NUMBER AND/OR TOOL.
8) BOW .015 / 0.38 MAX PER 1.00 / 25.4 ON SURFACE C
9) CIRCUIT SIZE INDICATES THE SIZE OF THE MATCHING DUAL-ROW HOUSING. TWO TPA STRAPS ARE REQUIRED FOR EACH HOUSING.
10) SEE SD-172952-001 (RECEPTACLE) OR 2036320000-SD (PLUG) FOR INSTALLATION INSTRUCTIONS.

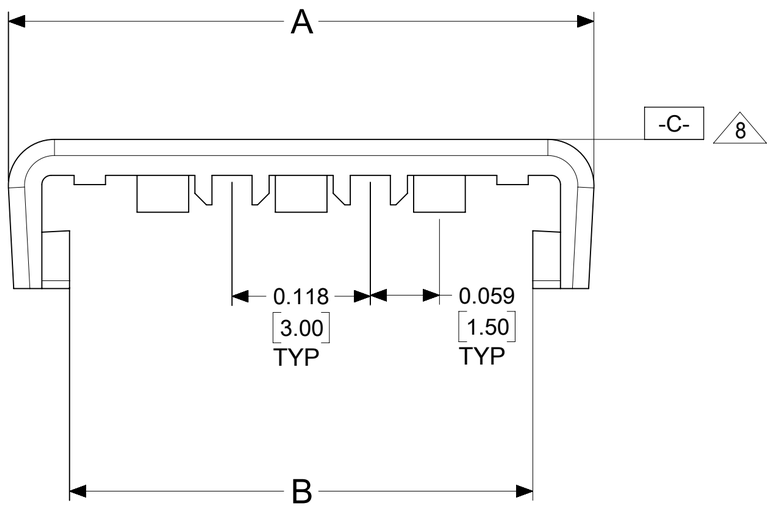

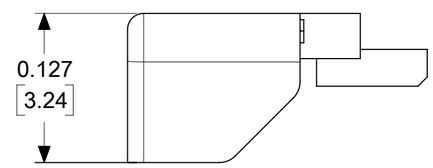

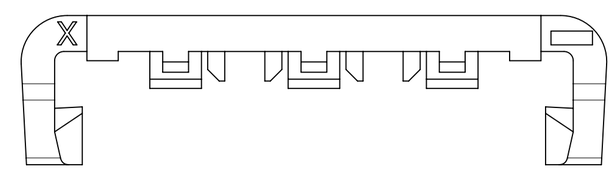

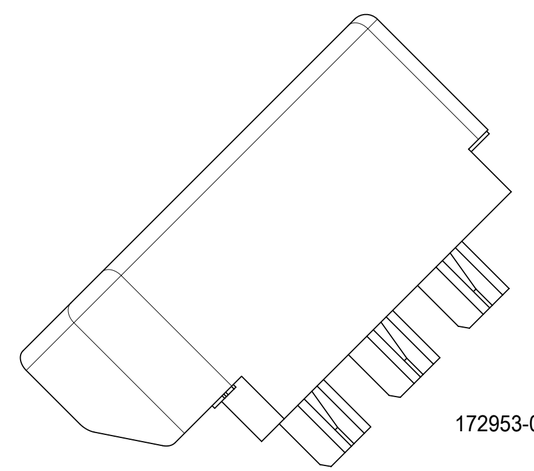

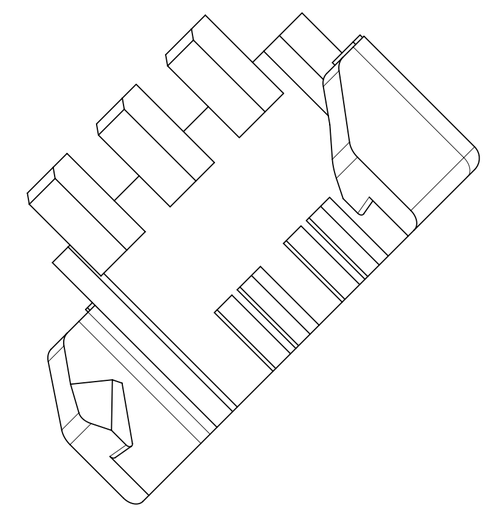

172953-06* SHOWN

24	172953-2401	1.563 / 39.70	1.459 / 37.05
22	172953-2201	1.445 / 36.70	1.341 / 34.05
20	172953-2001	1.327 / 33.70	1.222 / 31.05
18	172953-1801	1.209 / 30.70	1.104 / 28.05
16	172953-1601	1.091 / 27.70	.986 / 25.05
14	172953-1401	.973 / 24.70	.868 / 22.05
12	172953-1201	.854 / 21.70	.750 / 19.05
10	172953-1001	.736 / 18.70	.632 / 16.05
8	172953-0801	.618 / 15.70	.514 / 13.05
6	172953-0601	.500 / 12.70	.396 / 10.05
4	172953-0401	.382 / 9.70	.278 / 7.05
CKT SZ. 9	PART NUMBER	DIM A ±.020 ±0.51	DIM B ±.015 ±0.38

RELEASE STATUS	P1	RELEASE DATE	28.06.2017 21:50:01

QUALITY SYMBOLS
EA = 0
EC = 0
EP = 0
= 0
C = 0
= 0
= 0
= 0

THIS DRAWING CONTAINS INFORMATION THAT IS PROPRIETARY TO MOLEX ELECTRONIC TECHNOLOGIES, LLC AND SHOULD NOT BE USED WITHOUT WRITTEN PERMISSION

EC NO: 106482 2017/05/01
DRWN: CSLAFTER 2017/06/09
CHK'D: SSOUSEK 2017/06/28
APPR: FSMITH
MIGRATE TO NX

GENERAL TOLERANCES (UNLESS SPECIFIED)

	MM	INCH
4 PLACES	±	±
3 PLACES	±	± 0.01
2 PLACES	± 0.25	± 0.015
1 PLACES	± 0.38	±
0 PLACES	±	±

ANGULAR TOL ± 0.5

DRAFT WHERE APPLICABLE MUST REMAIN WITHIN DIMENSIONS

REV A2

DIMENSION UNITS: IN/MM
SCALE: 10:1
DRWN BY: BANDERSON DATE: 2015/01/13
CHK'D BY: SSOUSEK DATE: 2015/01/13
APPR BY: BPISZCZOR DATE: 2016/03/24
DRAWING SIZE: C
THIRD ANGLE PROJECTION

molex®

MICRO-FIT DUAL ROW TPA STRAP
FOR RECEPTACLE AND PLUG HOUSINGS

PRODUCT CUSTOMER DRAWING

SERIES	MATERIAL NUMBER	CUSTOMER
172953	SEE CHART	GENERAL MARKET

DOCUMENT NUMBER	DOC TYPE	DOC PART	SHEET NUMBER
SD-172953-001	PSD	001	1 OF 2

FORMAT: Eng-lega-master-tb-prod-C
REVISION: C
DATE: 2017/02/06