THIS DRAWING IS UNPUBLISHED. RELEASED FOR PUBLICATION AUG ,2006.
© COPYRIGHT – BY TYCO ELECTRONICS CORPORATION. ALL RIGHTS RESERVED.

LOC	DIST
DW	—

REVISIONS

P	LTR	DESCRIPTION	DATE	DWN	APVD
	D	REVISED (ECO-11-013077)	23JUN11	JC	WK

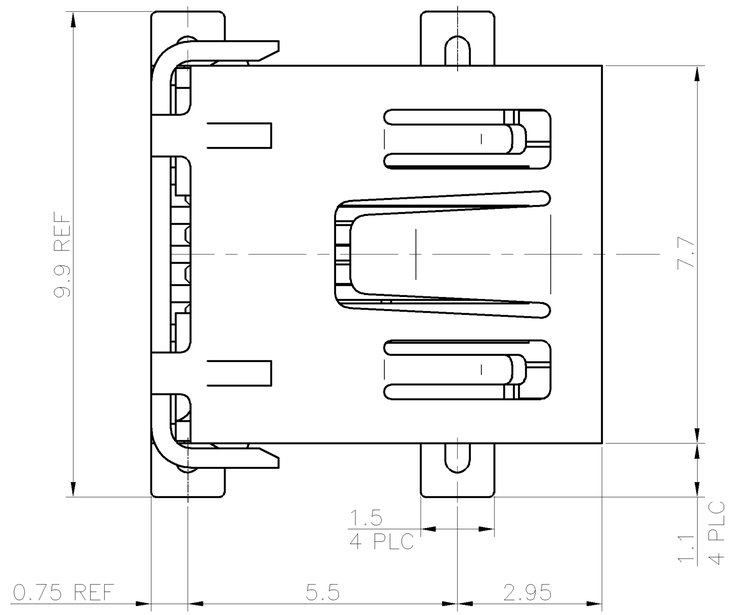

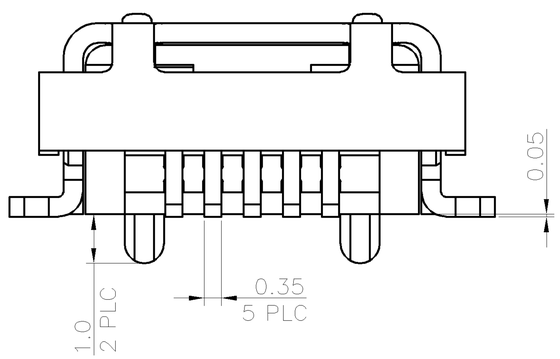

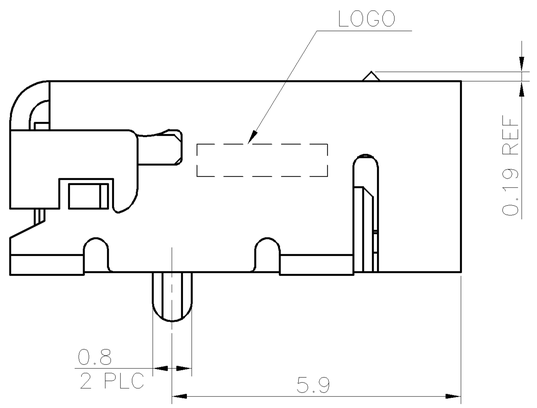

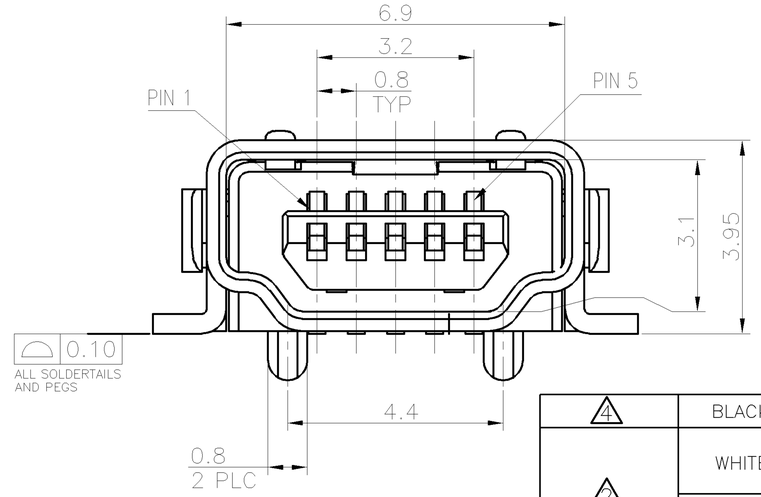

FINISH (SEE SHEET 2)	HSG. COLOR	PACKAGE	PART NUMBER
4	BLACK	REEL	2-1734327-2
2	WHITE	REEL	1-1734327-2
		TRAY	1-1734327-1
	BLACK	REEL	1734327-2
		TRAY	1734327-1

THIS DRAWING IS A CONTROLLED DOCUMENT.

DIMENSIONS: MM

TOLERANCES UNLESS OTHERWISE SPECIFIED:

0 PLC	± 0.38
1 PLC	± 0.25
2 PLC	± 0.13
3 PLC	± 0.05
4 PLC	± –
ANGLES	± 3°

MATERIAL: SEE SHEET 2

FINISH: SEE SHEET 2

DWN F. YANG 16DEC2008
CHK S. CHIEN 16DEC2008
APVD W. KODAMA 16DEC2008

PRODUCT SPEC 108-57062

QUALIFICATION TEST REPORT 501-57070

WEIGHT 0.76 GRAMS

TE Connectivity

NAME

MINI USB CONNECTOR
A SERIES, RCPT, R/A, SMT TYPE

SIZE	CAGE CODE	DRAWING NO	RESTRICTED TO
A3	00779	C-1734327	—

CUSTOMER DRAWING | SCALE — | SHEET 1 OF 4 | REV D

AMP 1470-19 REV 31MAR2000

THIS DRAWING IS UNPUBLISHED. RELEASED FOR PUBLICATION AUG ,2006.
© COPYRIGHT – BY TYCO ELECTRONICS CORPORATION. ALL RIGHTS RESERVED.

LOC	DIST
DW	–

REVISIONS

P	LTR	DESCRIPTION	DATE	DWN	APVD
		SEE SHEET 1.			

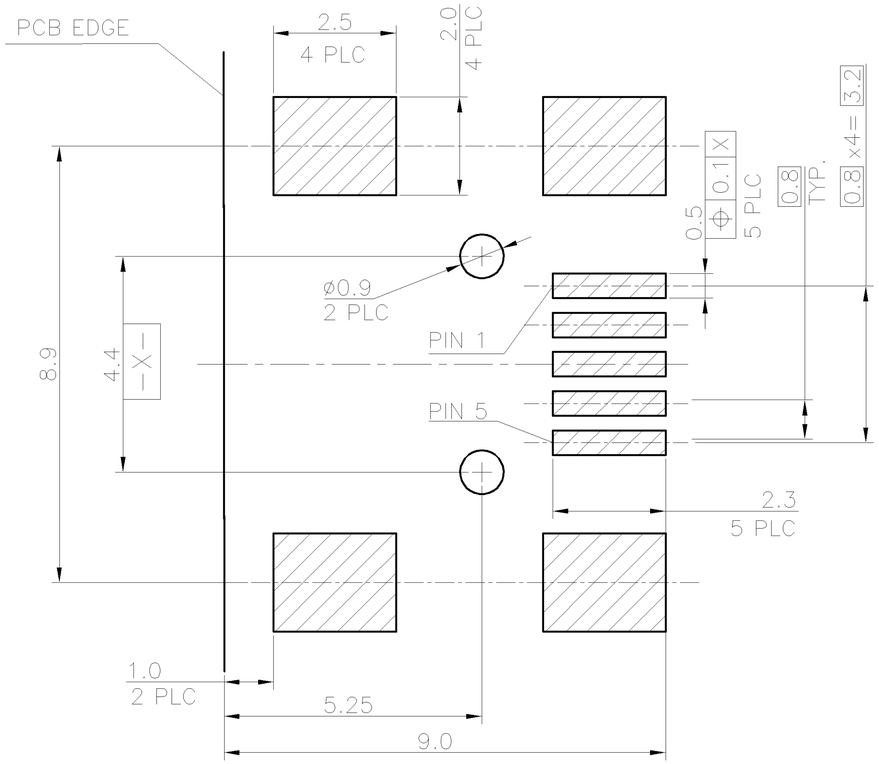

RECOMMENDED PCB LAYOUT (MOUNTING SIDE)
(THICKNESS=1.57mm) (TOLERANCE=±0.05mm)

NOTES:
1. MATERIAL:
HOUSING: PA9T ,WITH 30% GF, UL 94V–0, COLOR: SEE TABLE.
CONTACT: PHOSPHOR BRONZE, THICKNESS:0.25±0.05mm.
SHELL: PHOSPHOR BRONZE, THICKNESS:0.40±0.05mm.
2. FINISH:
CONTACTS: GOLD FLASH OVER
0.76μm [30μ"] MIN. PALLADIUM–NICKEL PLATED ON CONTACT AREA,
2.54μm [100μ"] MIN. MATTE–TIN PLATED ON OLDER TAILS:
1.27μm [50μ"] MIN. NICKEL UNDERPLATED ALL OVER.
SHELL: 2.032μm [80μ"] MIN. NICKEL PLATED ALL OVER
3. REFLOW SOLDER CAPABLE TO 260°C PER TE SPEC 109–201 CONDITION B.
4. FINISH:
CONTACTS: GOLD FLASH OVER
0.76μm [30μ"] MIN. PALLADIUM–NICKEL PLATED ON CONTACT AREA,
3.0μm [118μ"] MIN. MATTE–TIN PLATED ON SOLDER TAILS :
1.27μm [50μ"] MIN. NICKEL UNDERPLATED OVERALL.
SHELL: 0.76~2.28μm [30~90μ"] MATTE TIN
1.27μm [50μ"] MIN. NICKEL UNDERPLATED

THIS DRAWING IS A CONTROLLED DOCUMENT.

DIMENSIONS: MM

TOLERANCES UNLESS OTHERWISE SPECIFIED:
0 PLC ± –
1 PLC ± –
2 PLC ± –
3 PLC ± –
4 PLC ± –
ANGLES ± –

MATERIAL –
FINISH –

DWN
CHK
APVD
PRODUCT SPEC –
APPLICATION SPEC –
WEIGHT –

TE Connectivity

NAME
MINI USB CONNECTOR
A SERIES, RCPT, R/A, SMT TYPE

SIZE	CAGE CODE	DRAWING NO	RESTRICTED TO
A3	00779	C-1734327	–

CUSTOMER DRAWING | SCALE – | SHEET 2 OF 4 | REV D

THIS DRAWING IS UNPUBLISHED. RELEASED FOR PUBLICATION AUG ,2006.
© COPYRIGHT – BY TYCO ELECTRONICS CORPORATION. ALL RIGHTS RESERVED.

LOC	DIST
DW	—

REVISIONS

P	LTR	DESCRIPTION	DATE	DWN	APVD
		SEE SHEET 1.			

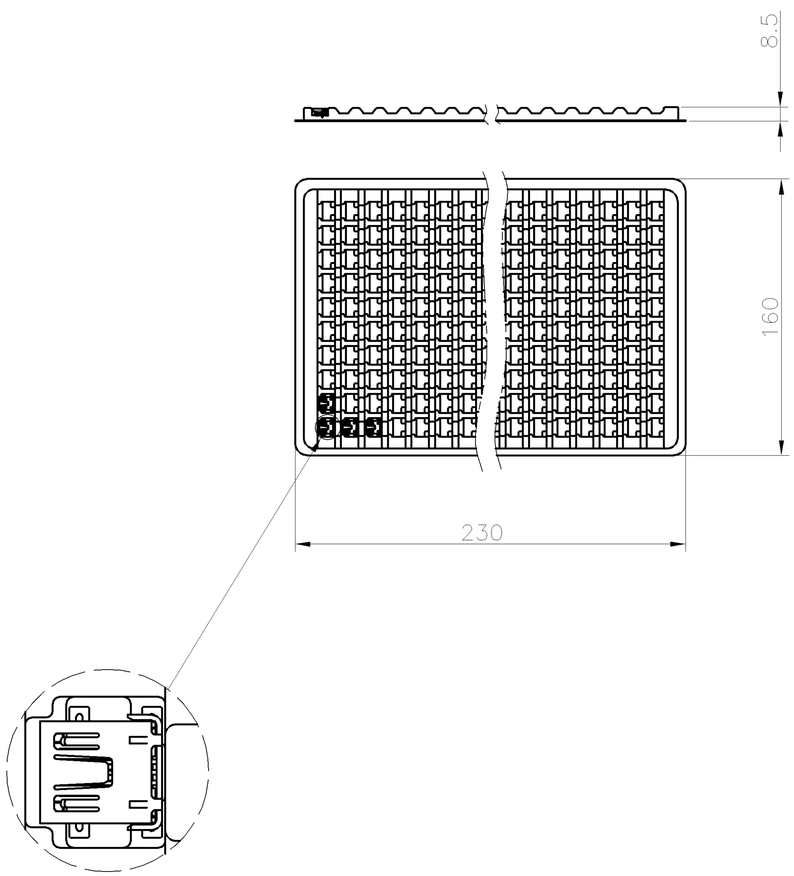

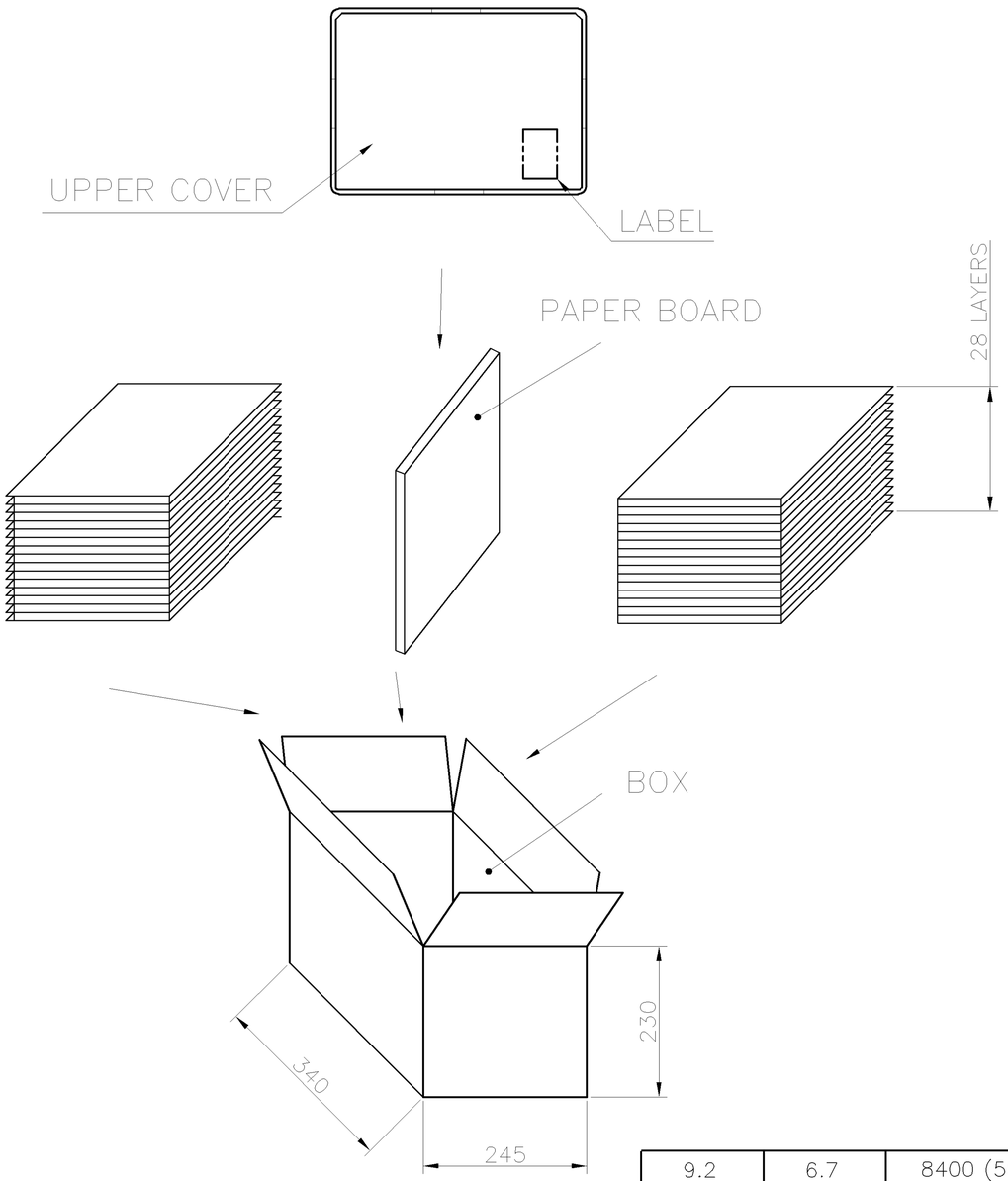

9.2	6.7	8400 (56 TRAYS)	150
G.W(KGS)	N.W(KGS)	QUANTITY/ BOX	PCS/ TRAY

THIS DRAWING IS A CONTROLLED DOCUMENT.

DIMENSIONS: MM

TOLERANCES UNLESS OTHERWISE SPECIFIED:
0 PLC ± –
1 PLC ± –
2 PLC ± –
3 PLC ± –
4 PLC ± –
ANGLES ± –

MATERIAL –

FINISH –

DWN
CHK
APVD
PRODUCT SPEC —
APPLICATION SPEC —
WEIGHT —

CUSTOMER DRAWING

TE Connectivity

NAME
MINI USB CONNECTOR
A SERIES, RCPT, R/A, SMT TYPE

SIZE	CAGE CODE	DRAWING NO	RESTRICTED TO
A3	00779	C-1734327	—

SCALE — SHEET 3 OF 4 REV D

THIS DRAWING IS UNPUBLISHED. RELEASED FOR PUBLICATION AUG ,2006.
© COPYRIGHT – BY TYCO ELECTRONICS CORPORATION. ALL RIGHTS RESERVED.

LOC	DIST
DW	—

REVISIONS

P	LTR	DESCRIPTION	DATE	DWN	APVD
		SEE SHEET 1.			

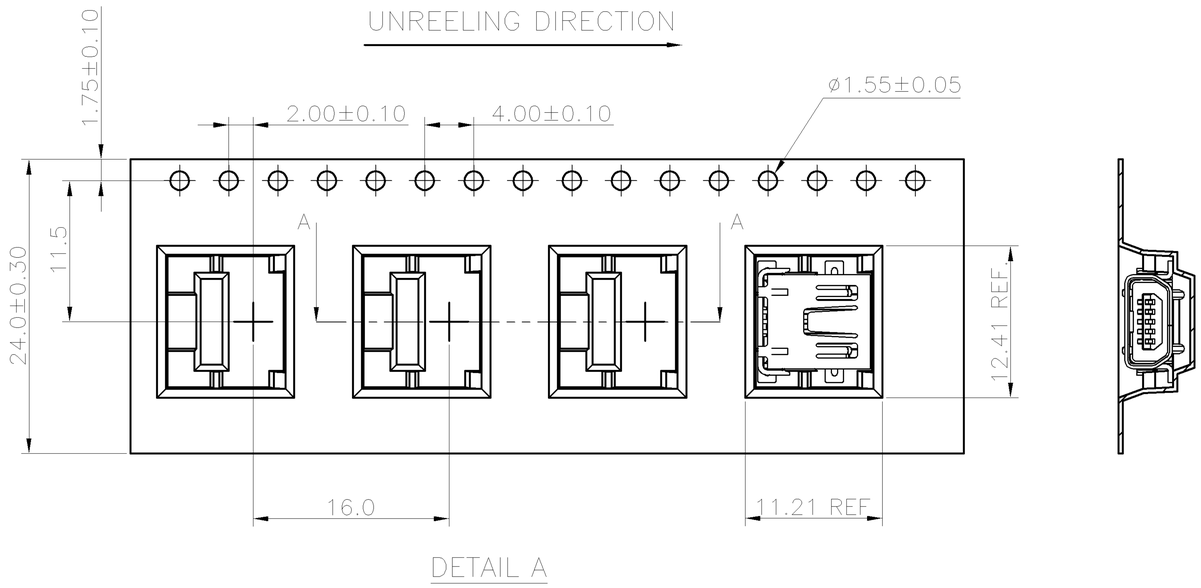

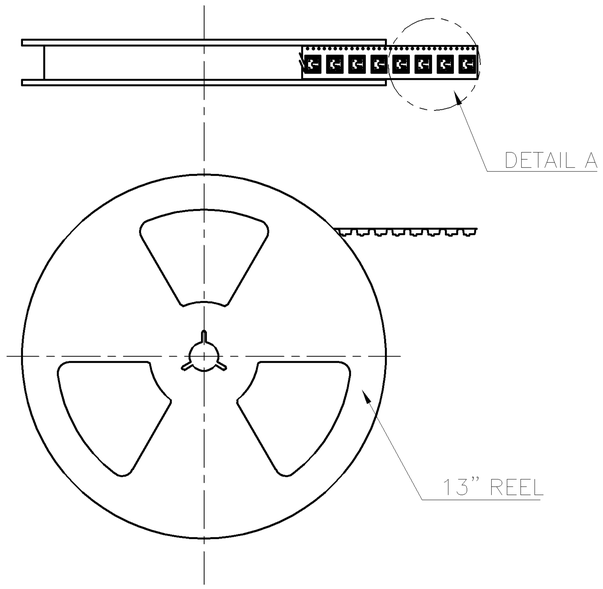

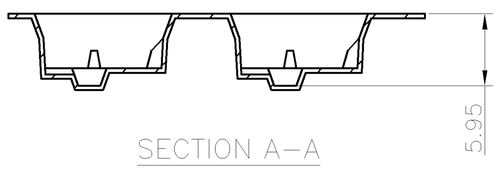

NOTES:
1. APPLICABLE DOCUMENT: EIA–481–2
2. PACKAGE: 700 PCS/REEL, 5 REELS/BOX
   W.G.:6.5Kg, N.G.: 5.5Kg
3. QUANTITY: 3500 PCS.

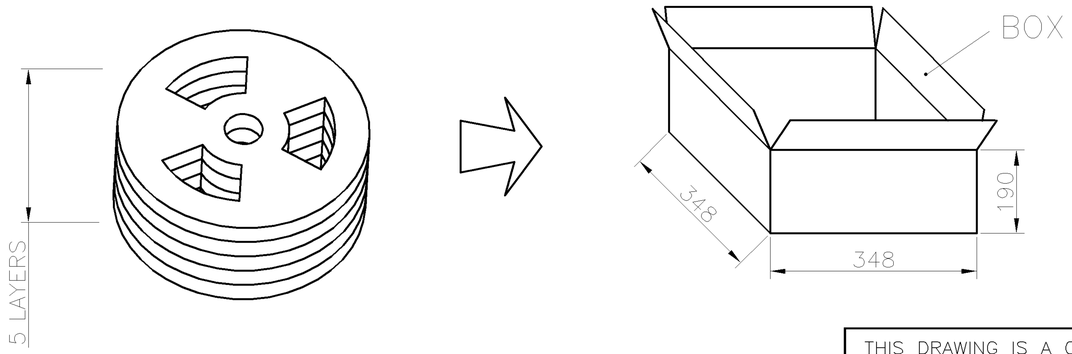

G.W(KGS)	N.W(KGS)	QUANTITY/ BOX	PCS/ REEL
6.5	5.5	3500	700

THIS DRAWING IS A CONTROLLED DOCUMENT.

DIMENSIONS: MM

TOLERANCES UNLESS OTHERWISE SPECIFIED:
0 PLC ± –
1 PLC ± –
2 PLC ± –
3 PLC ± –
4 PLC ± –
ANGLES ± –

MATERIAL –

FINISH –

DWN
CHK
APVD
PRODUCT SPEC —
APPLICATION SPEC —
WEIGHT —

TE Connectivity

NAME
MINI USB CONNECTOR
A SERIES, RCPT, R/A, SMT TYPE

SIZE	CAGE CODE	DRAWING NO	RESTRICTED TO
A3	00779	C-1734327	—

CUSTOMER DRAWING | SCALE — | SHEET 4 OF 4 | REV D